Parts Catalog

WORLDLAWN®

WY36
Commercial Mower

Worldlawn Power Equipment, Inc.

Industrial Park 2415 Ashland Ave. Beatrice, NE 68310

Toll Free Number: 1-800-267-4255

Table of Contents

Mower Assembly…… 1
Front Frame Assembly…… 2
Mower Deck Assembly…..…… 4
Rear Frame Assembly….…… 6
Console Frame Assembly ……..…… 8
Handle Bar and Console ……..…..… 10
Electrical Start-Up …… 12
Recoil Start-Up…… 13
Safety/Operation and Product Decals……..… 14
Grass Catcher Assembly ……..… 16

Mower Assembly

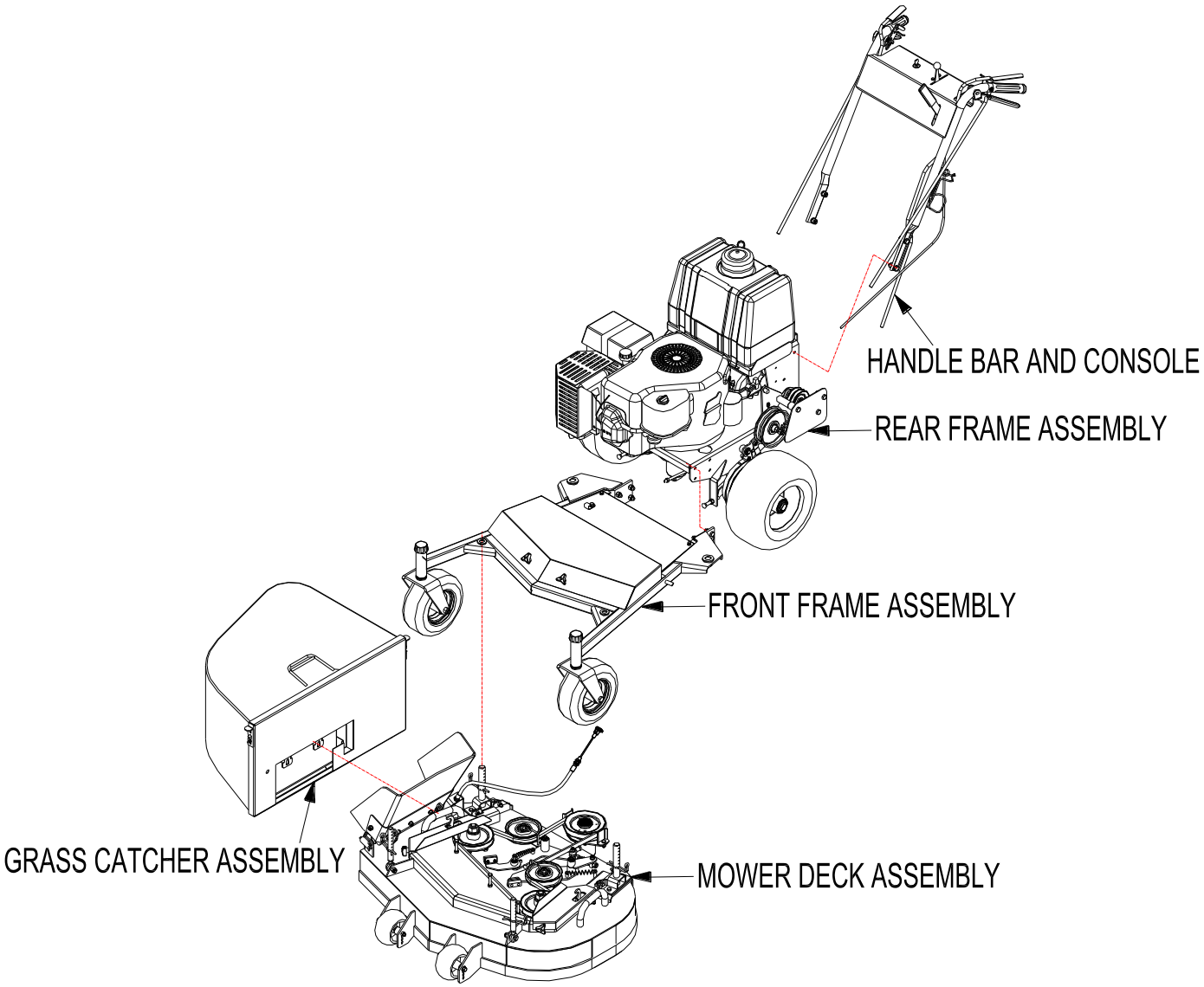

Front Frame Assembly

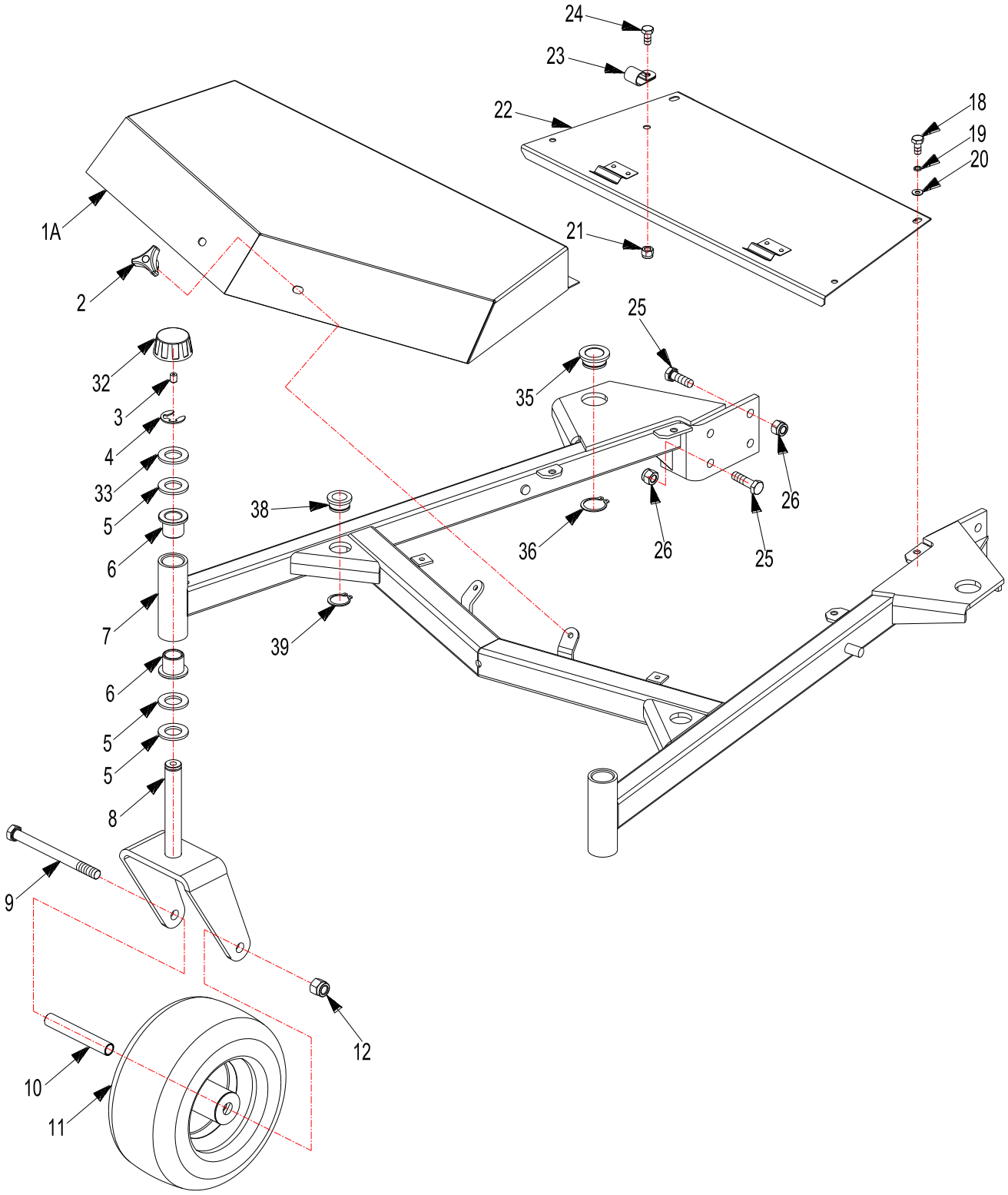

Front Frame Assembly

REF.	PART NO.	DESCRIPTION	36	36E
1A	3600011A	Belt Cover (without light)	×	×
2	3302190	3-Arm Knob	×	×
3	B1155-8	Grease Fitting M8	×	×
4	B896-15	Snap Ring M15	×	×
5	3601017	Washer M20	×	×
6	3301003	Flange Bushing	×	×
7	3601100	Caster Mount Weldment	×	×
8	4803200	Caster Wheel Yoke	×	×
9	B5782-12140	Bolt M12×140	×	×
10	4803001	Axle Tube	×	×
11	4803100	Caster Wheel Assembly	×	×
12	B6182-12	Locknut M12	×	×
18	B5783-612	Hex Hd Bolt M6×12	×	×
19	B93-6	Split Lock Washer M6	×	×

REF.	PART NO.	DESCRIPTION	36	36E
20	B97.1-6	Flat Washer M6	×	×
21	B6182-8	Locknut M8	×	×
22	3601140	Belt Cover	×	×
23	3601020	Clamp	×	×
24	B5783-816	Hex Hd Bolt M8×16	×	×
25	B5783-1030	Hex Hd Bolt M10×30	×	×
26	B6182-10	Locknut M10	×	×
32	3200011	Cover	×	×
33	3201005	Washer	×	×
35	3601016	Flange Bushing (Rear)	×	×
36	B894.2-30	Snap Ring M30	×	×
38	3601015	Flange Bushing (Front)	×	×
39	B894.2-25	Snap Ring M25	×	×

Mower Deck Assembly

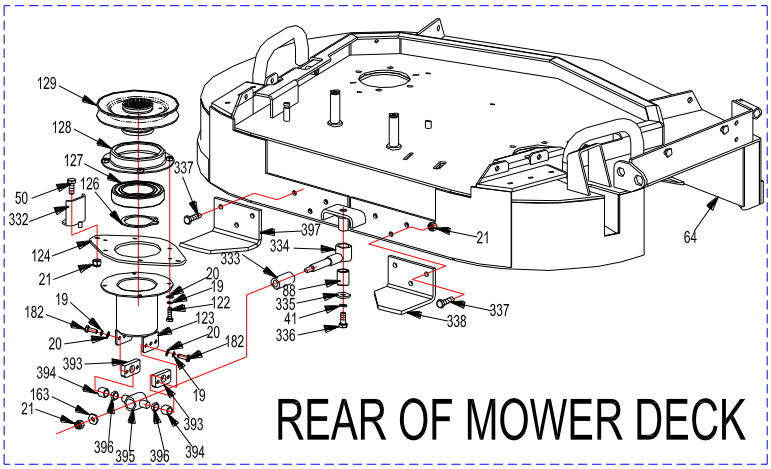

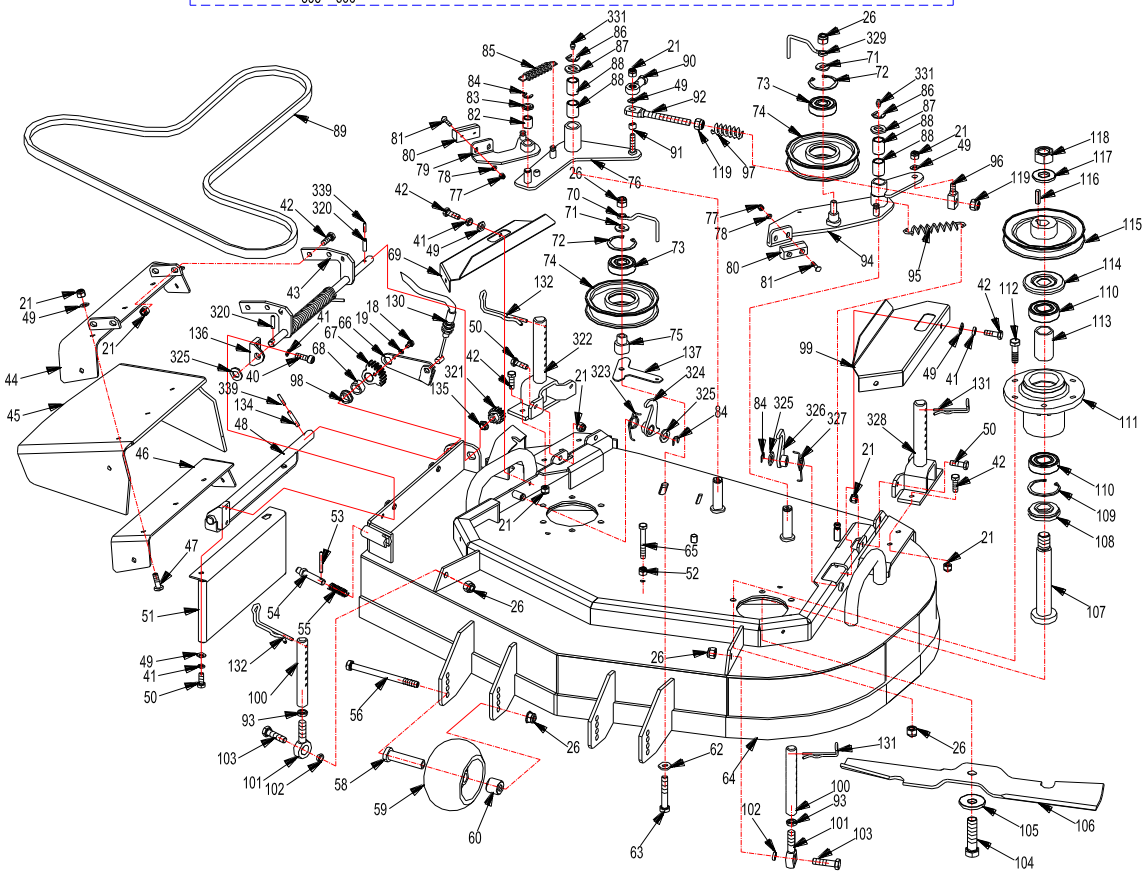

REF.	PART NO.	DESCRIPTION	36	36E
18	B5783-612	Hex Hd Bolt M6×12	×	×
19	B93-6	Split Lock Washer M6	×	×
20	B97.1-6	Flat Washer M6	×	×
21	B6182-8	Locknut M8	×	×
26	B6182-10	Locknut M10	×	×
40	B70-825	Screw M8×25	×	×
41	B93-8	Split Lock Washer M8	×	×
42	B5783-825	Hex Hd Bolt M8×25	×	×
43	3602795	Left Shaft Weldment	×	×

REF.	PART NO.	DESCRIPTION	36	36E
60	3602014	Deck Wheel Spacer	×	×
62	4808002	Washer	×	×
63	B5782-1065	Bolt 10×65	×	×
64	3602140	Mower Deck Weldment	×	×
65	B5782-860	Hex Hd Bolt M8×60	×	×
66	3602670	Chute Bracket Weldment	×	×
67	3602666	Large Chute Gear	×	×
68	3602676	Bushing	×	×
69	3602021	Right Belt Cover	×	×

Mower Deck Assembly

REF.	PART NO.	DESCRIPTION	36	36E
44	3602520A	Deflector Shield Weldment	×	×
45	3602505A	Deflector Shield	×	×
46	3602506A	Deflector Shield Support Bracket	×	×
47	B818-825	Hex Hd Flange Bolt M8×25	×	×
48	3602665	Right Shaft Weldment	×	×
49	B97.1-8	Flat Washer M8	×	×
50	B5783-820	Hex Hd Bolt M8×20	×	×
51	3602001B	Mulching Plate	×	×
52	B6170-8	Locknut M8	×	×
53	B879-540	Pin 5×40	×	×
54	3602012	Axis Pin	×	×
55	2806002	Compression Spring	×	×
56	B5787-10120	Hex Hd Bolt M10×120	×	×
58	5201082	Scalp Roller Bushing	×	×
59	5201081	Anti Scalp Roller	×	×
85	2802088	Spring	×	×
86	B896-12	Snap Ring M12	×	×
87	3302095	Washer M8	×	×
88	B2685-162025	Iolite Bronze Bearing16×20×25	×	×
89	3602003	Blade Drive Belt	×	×
90	SIBJK8T	Rod End Bearing	×	×
91	3602022	Bushing	×	×
92	3602023	Connecting Rod	×	×
93	B6172-10	Nut M10	×	×
94	3602730	Blade Brake Arm Assembly	×	×
95	3602013	Blade Brake Spring	×	×
96	3602721	Swivel	×	×
97	3602017A	Compression Spring	×	×
98	3602673	Bushing 2	×	×
99	3602020	Left Belt Cover	×	×
100	3602761	Height Adjustment Rod Front	×	×
101	B9163-JK10C	Bearing SABJK10C	×	×
102	4801302	Bushing	×	×
103	B5782-1040	Bolt M10×40	×	×
104	B5785-1660	Bolt M16×1.5×60	×	×
105	5201042	Washer	×	×
106	3602005	Blade	×	×
107	5201051	Spindle Shaft	×	×
108	5201043	Lower Dust Guard	×	×
109	B893.1-52	Snap Ring M52	×	×
110	B276-6205RS	Bearing 6205-2RS	×	×
111	5201050	Spindle Housing	×	×
112	B5783-1035	Hex Hd Bolt M10×35	×	×
113	5201049	Bushing	×	×
114	5201044	Upper Dust Guard	×	×
115	3602200	Blade Pulley	×	×
116	B1096-625C	Key C6×25	×	×
117	5201048	Washer	×	×
118	B6171-20	Nut M20×1.5	×	×
119	DIN985-10	Nut M10	×	×
122	B5783-620	Hex Hd Bolt M6×20	×	×
123	3602990	Dust Cover Weldment	×	×
124	3202201	Pulley Assembly Mounting Plate	×	×

REF.	PART NO.	DESCRIPTION	36	36E
70	3602025	Belt Guide	×	×
71	3302058	Washer M10	×	×
72	B893.1-47	Snap Ring M47	×	×
73	B276-6303RS	Bearing 6303-2RS	×	×
74	3302056	Idler Pulley	×	×
75	3602018A	Bushing	×	×
76	3602945	Shift Arm	×	×
77	B6182-5	Locknut M5	×	×
78	B97.1-5	Flat Washer M5	×	×
79	3602965	Shift Arm	×	×
80	2802121	Brake Pad	×	×
81	B819-525	Screw M5×25	×	×
82	B2685-121618	Iolite Bronze Bearing 12×16×18	×	×
83	2802086	Spacer	×	×
84	B896-9	Snap Ring M9	×	×
126	B894.2-55	Snap Ring M55	×	×
127	B276-6011RS	Bearing 6011-2RS	×	×
128	3602810	Bearing Housing	×	×
129	3602820A	Belt Pulley Weldment	×	×
130	3602400	Cable Assembly	×	×
131	4800007	Height Adjustment Pin-LH	×	×
132	4800008	Height Adjustment Pin-RH	×	×
134	B879-630	Pin 6×30	×	×
135	3602677	Bushing	×	×
136	3602783A	Bracket	×	×
137	3602026	Backing Plate	×	×
163	3303018	Washer	×	×
182	B5783-616	Hex Hd Bolt M6×16	×	×
320	B879-625	Pin 6×25	×	×
321	3602792	Small Chute Gear	×	×
322	3602985	Height Adjustment RH Rear	×	×
323	3602028	Torsion Spring-RH	×	×
324	3602975	Deck Hook Weldment -RH	×	×
325	B97.1-12	Washer M12	×	×
326	3602970	Deck Hook Weldment -LH	×	×
327	3602027	Torsion Spring-LH	×	×
328	3602980	Height Adjustment LH Rear	×	×
329	3602722	Belt Guide	×	×
331	B1152-6	Grease Fitting M6	×	×
332	3602750	Belt Guide Weldment	×	×
333	3602029	Nylon Bushing	×	×
334	3602875	Axle Pivot Weldment	×	×
335	2802183B	Washer	×	×
336	B5783-818	Hex Hd Bolt M8×18	×	×
337	B5783-830	Bolt M8×30	×	×
338	3602042	Right Guard Plate	×	×
339	B879-420	Pin 4×20	×	×
393	3602993	Sliding Block	×	×
394	B/T12613-P141212	Roller Sleeve	×	×
395	3602995	Sleeve Weldment	×	×
396	3602030	Rubber Pad	×	×
397	3602041	Left Guard Plate	×	×

Rear Frame Assembly

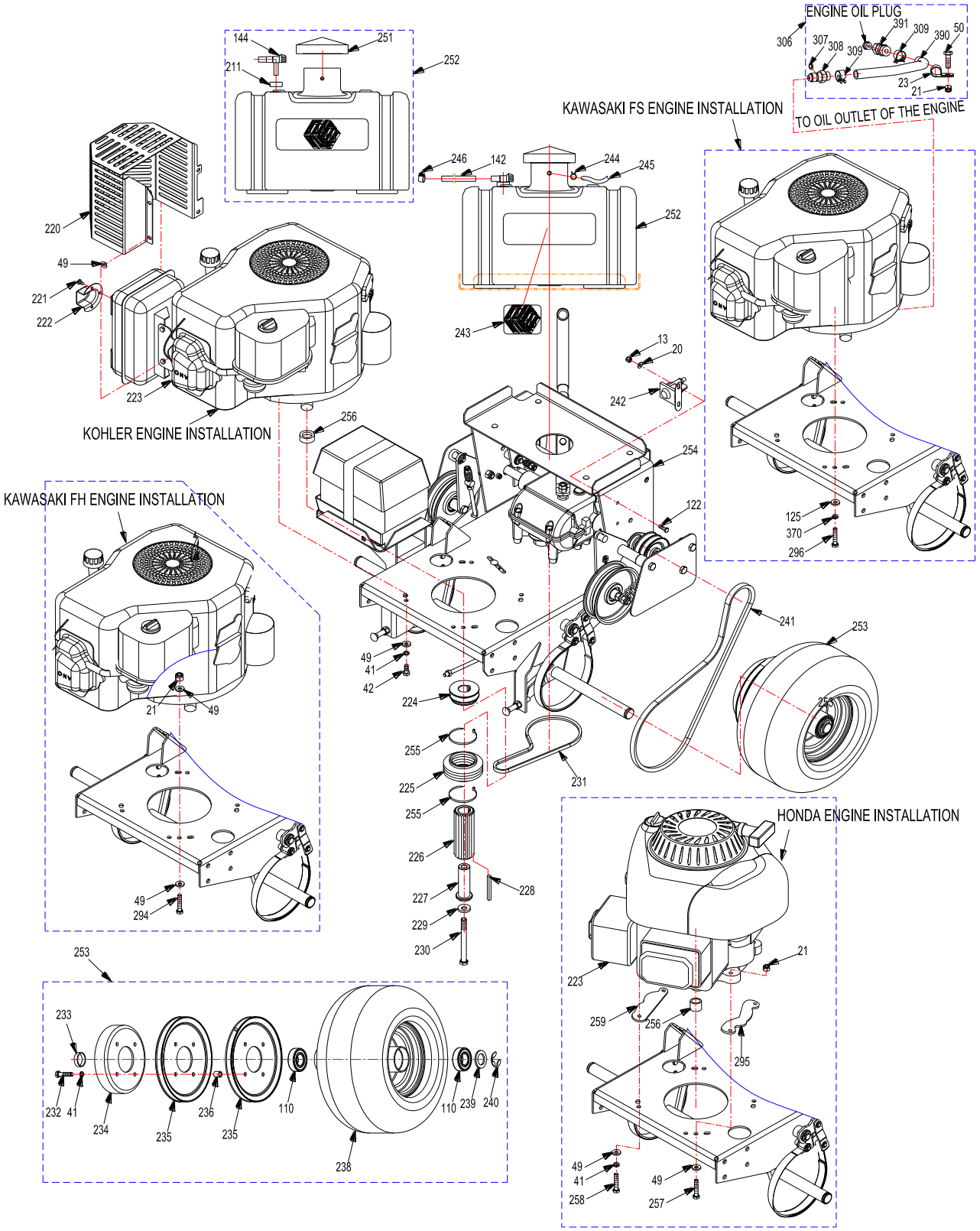

Rear Frame Assembly

REF.	PART NO.	DESCRIPTION	36	36E
13	B6182-6	Locknut M6	×	×
21	B6182-8	Locknut M8 (Kawasaki FH&Honda)	×	×
23	3601020	Clamp (Kawasaki FS)	×	×
41	B93-8	Split Lock Washer M8(Kohler&Honda)	×	×
42	B5783-825	Hex Hd Bolt M8×25 (Kohler)	×	×
49	B97.1-8	Flat Washer M8 (Except Kawasaki FS)	×	×
50	B5783-820	Hex Hd Bolt M8×20 (Kawasaki FS)	×	×
110	B276-6205RS	Bearing 6205-2RS	×	×
122	B5783-620	Hex Hd Bolt M6×20	×	×
125	B97.1-10	Flat Washer M10(Kawasaki FS)	×	×
142	4805008	Fuel Line 1200	×	×
144	363418	Fuel Valve	×	×
370	B93-10	Washer M10(Kawasaki FS)	×	×
211	3307023B	Grommet	×	×
220	3607001	Muffler Guard (Kohler)	×	×
221	B845-5513	Screw ST 5.5×13 (Kohler)	×	×
222	4804008	Vent-pipe (Kohler)	×	×
223	3607100	Kohler CV15-E		×
	3607110	Kawasaki FH430V-S22	×	
	3607111	Kawasaki FH430V-S20		×
	3607112	Kawasaki FH381V-S22	×	
	3607113	Kawasaki FH381V-S20		×
	3607114	Kohler CV15-R	×	
	3607115	Kawasaki FH541-E		×
	3607116	Kawasaki FH541-R	×	
	3607117	Honda 13HP GXV390-R	×	
	3607118	Honda 13HP GXV390-E		×
224	3607009	Transmission Drive Pulley	×	×
225	3607008	Rubber Boot	×	×
226	3607005B	Outer Spline Housing	×	×
227	3607006	Flange Bushing	×	×
228	3607004	Key	×	×
229	3307011	Disc Spring Washer	×	×
230	3607007	Bolt 7/16-20UNF×4.5	×	×

REF.	PART NO.	DESCRIPTION	36	36E
231	3600003	Transmission Drive Belt	×	×
232	B5783-835	Hex Hd Bolt M8×35	×	×
233	3605001	Bushing	×	×
234	4809004	Brake Drum	×	×
235	4809002	Wheel Drive Pulley	×	×
236	4809003	Spacer	×	×
238	4809100	Rear Tire & Rim Assembly	×	×
239	4809001	Washer	×	×
240	XSZ56-2-06	Snap Ring M19	×	×
241	3600002	Wheel Drive Belt	×	×
242	5208043	Start-up Relay		×
243	8378	Fuel Tank Decal	×	×
244	3307041	Clamp	×	×
245	4805006	Fuel Line	×	×
246	B8870-16	Hose Clamp	×	×
251	5204019	Gas Cap	×	×
252	3603410	Fuel Tank Assembly	×	×
253	4809000	Drive Wheel Assembly	×	×
254	3603000A	Console Frame Assembly	×	×
255	5208008	Plastic Tie 5×200	×	×
256	3607002	Bushing (Kawasaki&Kohler)	×	×
	3207002	Bushing (Honda)	×	×
257	B5783-845	Bolt M8×45(Honda)	×	×
258	2200020A	Long JH Bolt(Honda)	×	×
259	2803080	Right Backing Plate(Honda)	×	×
294	B5783-840	Bolt M8×40(Kawasaki FH)	×	×
295	2803079	Left Backing Plate (Honda)	×	×
296	5203435	Bolt 3/8-16UNC×1-1/2 (Kawa FS)	×	×
306	4804023	Oil Outlet Tube Assembly (Kawa FS)	×	×
307	B3452.1-16265	O Ring 16×2.65 (Kawa FS)	×	×
308	5203421	Straight Adapter (Kawa FS)	×	×
309	B8870-19	Hose Clamp (Kawasaki FS)	×	×
390	4804024	Oil Outlet Rubber Tube (Kawa FS)	×	×
391	5203422	Straight Adapter (Kawasaki FS)	×	×

Console Frame Assembly

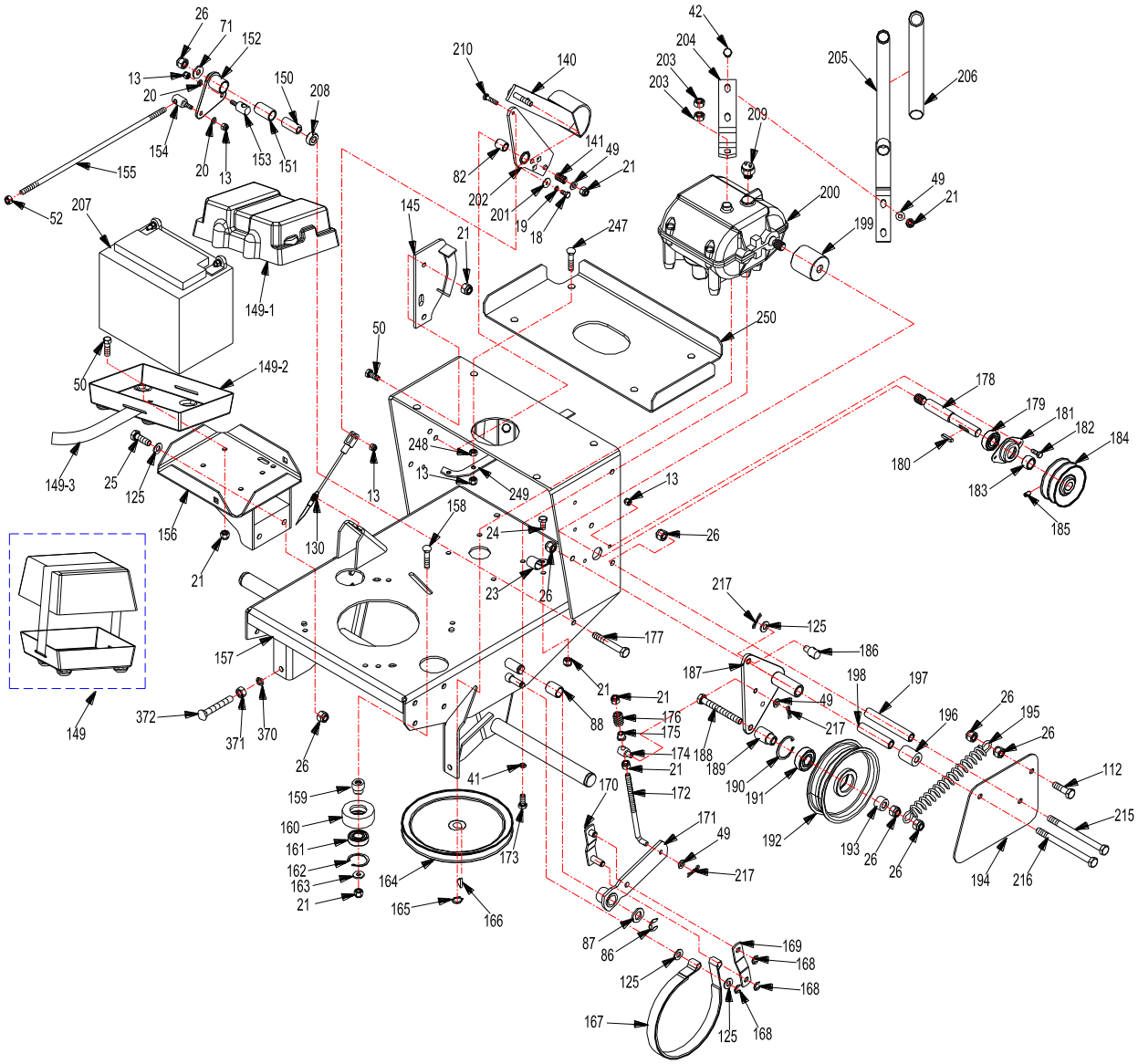

REF.	PART NO.	DESCRIPTION	36	36E
13	B6182-6	Locknut M6	×	×
18	B5783-612	Hex Hd Bolt M6×12	×	×
19	B93-6	Split Lock Washer M6	×	×
20	B97.1-6	Flat Washer M6	×	×
21	B6182-8	Locknut M8	×	×
23	3601020	Wire Clamp	×	×
24	B5783-816	Hex Hd Bolt M8×16	×	×
25	B5783-1030	Hex Hd Bolt M10×30	×	×
26	B6182-10	Locknut M10	×	×

REF.	PART NO.	DESCRIPTION	36	36E
41	B93-8	Split Lock Washer M8	×	×
42	B5783-825	Hex Hd Bolt M8×25	×	×
49	B97.1-8	Flat Washer M8	×	×
50	B5783-820	Hex Hd Bolt M8×20	×	×
52	B6170-8	Locknut M8	×	×
71	3302058	Washer M10	×	×
82	B2685-121618	Oilite Bronze Bearing 12×16×18	×	×
86	B896-12	Snap Ring M12	×	×
87	3302095	Washer M8	×	×

Console Frame Assembly

EF.	PART NO.	DESCRIPTION	36	36E
88	B2685-162025	Bearing 16×20×25	×	×
112	B5783-1035	Hex Hd Bolt M10×35	×	×
125	B97.1-10	Flat Washer M10	×	×
130	3602400	Cable Assembly	×	×
140	3603203	Chute Control Pedal	×	×
141	3603204	Compression Spring	×	×
145	3603202	Pedal Limit Plate Weldment	×	×
149	3603180	Battery Cover Assembly	×	×
149-1	3603345-1	Battery Cover Lid	×	×
149-2	3603345-2	Battery Cover Base	×	×
149-3	3603349	Strap	×	×
150	2803016	Bushing	×	×
151	3303037	Bushing	×	×
152	3603100	Blade Control Arm	×	×
153	3603011	Swivel Joint	×	×
154	2800019	Swivel Joint	×	×
155	3603009	Blade Engage Control Rod	×	×
156	3603150	Battery Base Mounting Plate		×
157	3603020A	Console Frame Weldment	×	×
158	B12-835	Hex Hd Bolt M8x35	×	×
159	3603126	Bushing	×	×
160	3203018	Tension Pulley	×	×
161	B276-6003RS	Bearing 6003-2RS	×	×
162	B893.1-35	Snap Ring M35	×	×
163	3303018	Washer	×	×
164	3603130	Transmission Pulley	×	×
165	B894.2-16	Snap Ring M16	×	×
166	4802011	Key Woodruff	×	×
167	4806430	Brake Band	×	×
168	B896-8	Snap Ring M8	×	×
169	4806401	Control Rod	×	×
170	4806420	Connect Rod Weldment	×	×
171	4806410	Shift Arm	×	×
172	3603013	Brake Rod	×	×
173	4802012	Bolt 5/16-18×3/4	×	×
174	3603012	Swivel Joint	×	×
175	2806010	Nylon Bushing	×	×
176	2800017	Compression Spring	×	×
177	B5782-1070	Hex Hd Bolt M10×70	×	×
178	3603001	Drive Shaft	×	×
179	99502H	Bearing 99502H-2RS	×	×

REF.	PART NO.	DESCRIPTION	36	36E
180	B1096-525	Key 5×25	×	×
181	2800011	Bearing Housing	×	×
182	B5783-616	Hex Hd Bolt M6×16	×	×
183	3603002	Spacer	×	×
184	4802200A	Wheel Drive Pulley Weldment	×	×
185	B80-86	Screw M8×6	×	×
186	4806003	Swivel Joint	×	×
187	3603060	Shift Arm Weldment	×	×
188	B5783-1090	Hex Hd Bolt M10×90	×	×
189	3603082	Bushing	×	×
190	B893.1-40	Snap Ring M40	×	×
191	B276-6203RS	Bearing 6203-2RS	×	×
192	5201012	Idler Pulley Assembly	×	×
193	3603083	Spacer	×	×
194	3603005	Belt Guard Plate	×	×
195	4806004	Idler Spring	×	×
196	3603004	Spacer	×	×
197	3603006	Spacer	×	×
198	4806007	Bushing	×	×
199	4802008	Spline Housing 240-888	×	×
200	4802500	Transmission 241-008	×	×
201	B96-6	Washer M6	×	×
202	3603201	Pedal Control Arm	×	×
203	4802010	Nut 3/8-24 UNF	×	×
204	4802007	Transmission Gear Shift	×	×
205	3603140	Gear Shift Extension Handle	×	×
206	4802004	Handle Grip	×	×
207	5208002	12V Battery		×
208	3603008	Spacer	×	×
209	4807006	Transmission Switch	×	×
210	B5783-625	Hex Hd Bolt M6×25	×	×
215	B5782-10140	Bolt M10×140	×	×
216	B5782-10130	Bolt M10×130	×	×
217	XSZ56-1-17	Hair Pin	×	×
247	B801-630	Carriage Bolt	×	×
248	B6170-6	Nut M6	×	×
249	3603368	Strap	×	×
250	3603016	Fuel Tank Base Plate	×	×
370	B93-10	Washer M10	×	×
371	B6170-10	Nut M10	×	×
372	3603015	Bolt M10	×	×

Handle Bar and Console

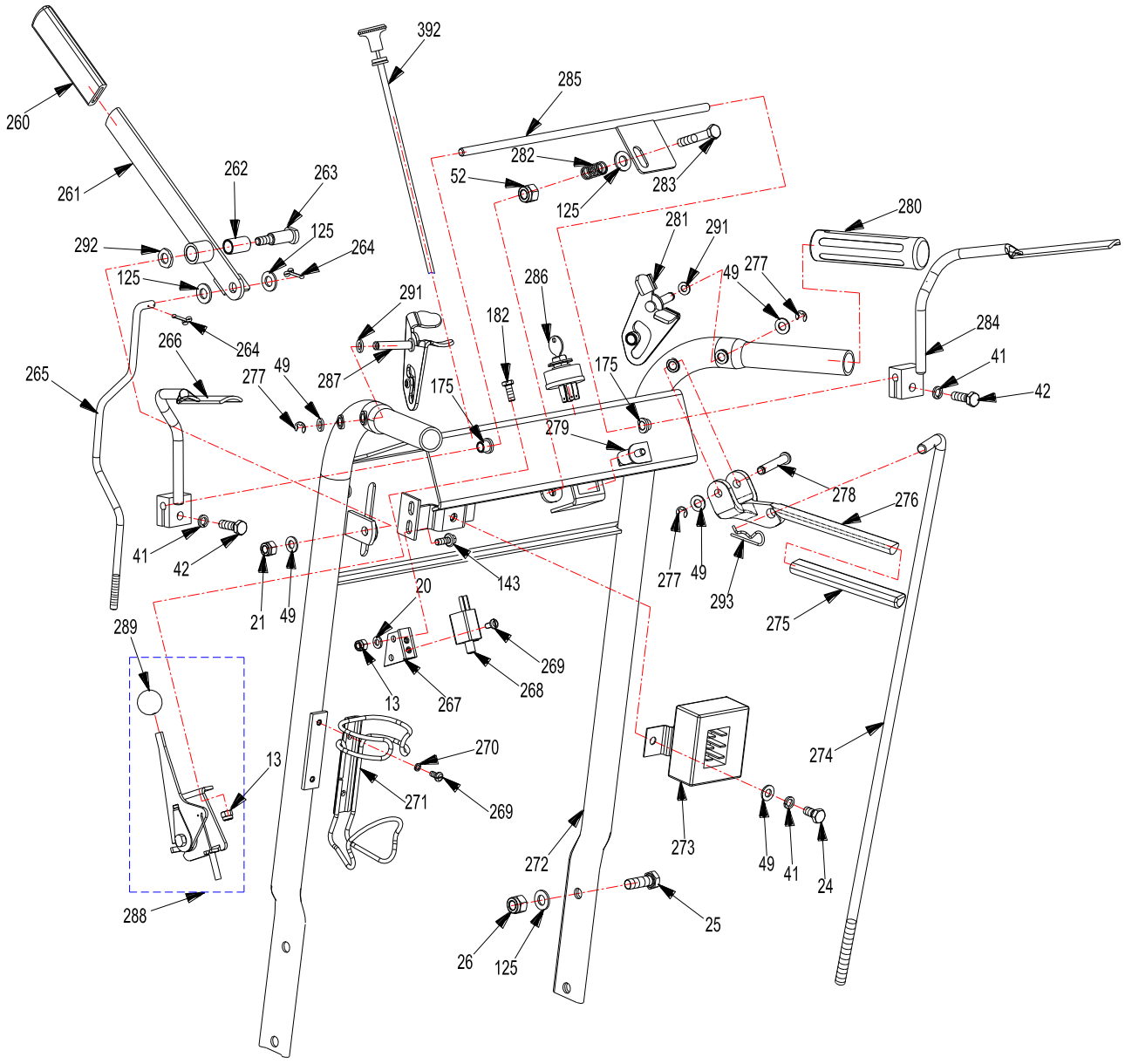

Handle Bar and Console

REF.	PART NO.	DESCRIPTION	36	36E
13	B6182-6	Locknut M6	×	×
20	B97.1-6	Flat Washer M6	×	×
21	B6182-8	Locknut M8	×	×
24	B5783-816	Hex Hd Bolt M8×16	×	×
25	B5783-1030	Hex Hd Bolt M10×30	×	×
26	B6182-10	Locknut M10	×	×
41	B93-8	Split Lock Washer M8	×	×
42	B5783-825	Hex Hd Bolt M8×25	×	×
49	B97.1-8	Flat Washer M8	×	×
52	B6170-8	Locknut M8	×	×
125	B97.1-10	Flat Washer M10	×	×
143	B5787-616	Hex Hd Bolt M6×16	×	×
175	2806010	Flange Bushing	×	×
182	B5783-616	Hex Hd Bolt M6×16	×	×
260	3306002	Handle Grip	×	×
261	3606100	Mower Blade Drive Lever	×	×
262	3303023	Bushing	×	×
263	2806055	Axis Pin	×	×
264	B91-2520	Cotter Pin 2.5×20	×	×
265	3606001	Blade Control Rod	×	×
266	3606080	Operator Presence Control Handle-LH	×	×
267	3606002	Switch Bracket	×	×
268	5208015	Brake Switch		×
	2808005	Blade Switch	×	
269	B67-510	Screw M5×10	×	×
271	2806090	Cup Rack Weldment	×	×
272	3606040	Handle Bar Assembly	×	×

REF.	PART NO.	DESCRIPTION	36	36E
	3606040A	Handle Bar Assembly (Kawasaki FS)	×	×
273	4807103	Relay Set		×
274	4806006	Brake Control Rod	×	×
275	4806014	Handle Grip	×	×
276	4806009	Steering Lever, LH	×	×
277	B896-6	Snap Ring M6	×	×
278	4806011	Axis Pin	×	×
279	2808001	Operator Presence Control Switch	×	×
280	3306005	Handle Grip	×	×
281	3606060	Neutral Latch-RH	×	×
282	4806013	Compression Spring	×	×
283	B5782-845	Hex Hd Bolt M8×45	×	×
284	3606090	Operator Presence Control Handle-RH	×	×
285	3606070	Operator Presence Control Rod Assembly	×	×
286	5208003	Ignition Switch		×
	4807003	Key Switch（Kawasaki13HP）	×	
	2808019	Ignition Switch	×	
287	3606050	Neutral latch-LH	×	×
288	3606120	Throttle Control Assembly（Kawasaki）	×	×
	3306004	Throttle Control Assembly（Kohler）	×	×
	2806105	Throttle Control Assembly（Honda）	×	×
289	3306030	Knob	×	×
291	2806086	Saddle Shaped Washer 8	×	×
292	2806061	Disc Spring Washer M12	×	×
293	4806002	Hair Pin Cotter Pin	×	×
392	5002220	Choke Cable Assembly (Kawasaki FS)	×	×

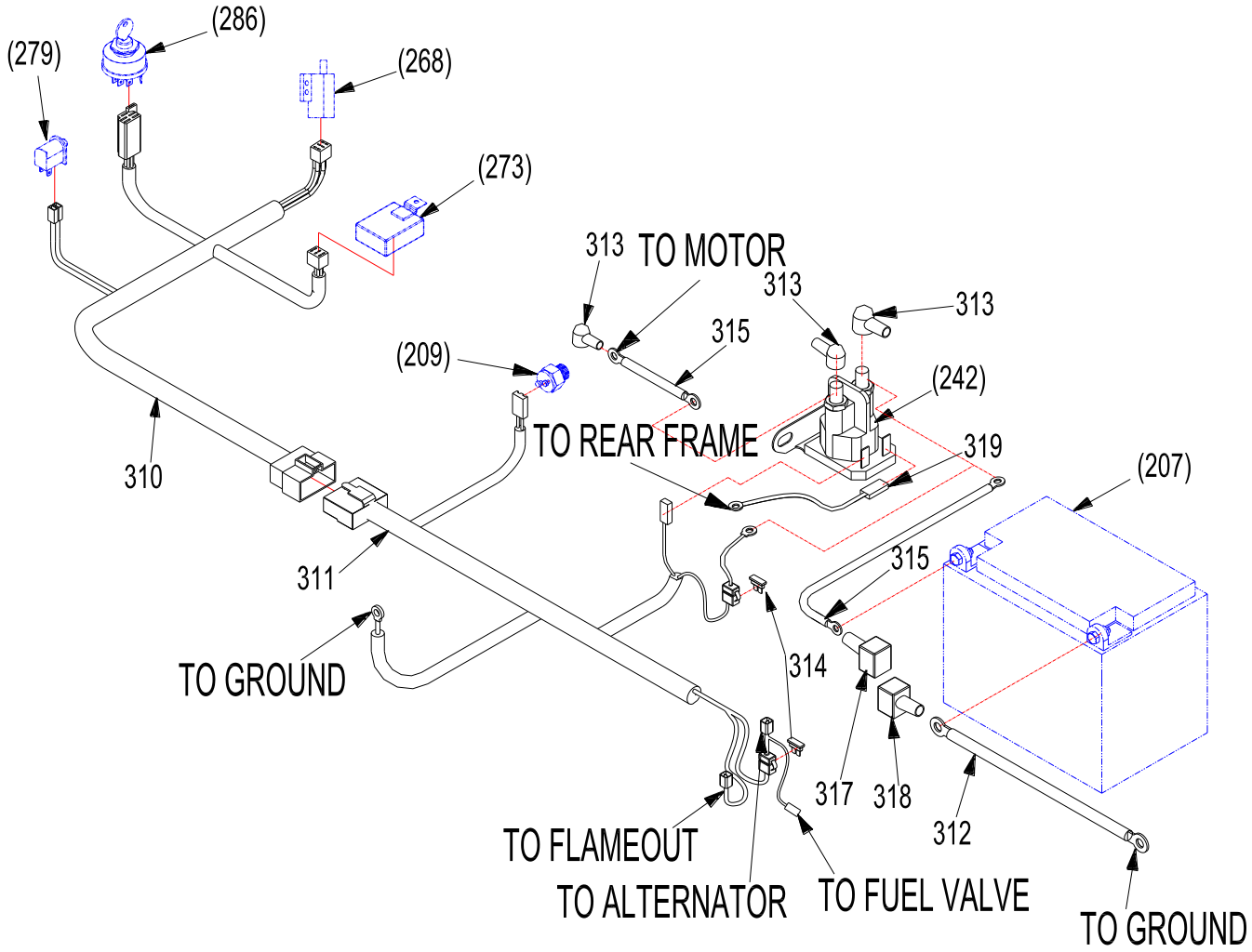

REF.	PART NO.	DESCRIPTION	36E
207	5208002	12V Battery	×
209	4807006	Transmission Switch (Normal open)	×
242	5208043	Start-up Relay	×
268	5208015	Brake Switch	×
273	4807103	Relay Set	×
279	2808001	Operator Presence Control Switch	×
286	5208003	Ignition Switch	×
310	3609005A	Wiring Harness, Handle（Kohler）	×
	3609032	Wiring Harness, Handle	×
		(Kawasaki 13HP&Honda, without light)	
311	3609009C	Wiring Harness, Console（Kohler）	×
	3609036	Wiring Harness, Console	×

REF.	PART NO.	DESCRIPTION	36E
		(Kawasaki 13HP, without light)	
	3609017A	Wiring Harness, Console	×
		(Kawasaki 16HP, without light)	
	3609052	Wiring Harness, Console	×
		(Honda 13HP, without light)	
312	5008008	Negative Cable	×
313	2808107	Terminal Insulator	×
314	4807107	Fuse 30A	×
315	5008004	Positive Cable/Power Wire	×
317	3312032	Battery Boot (Positive)	×
318	3312031	Battery Boot (Negative)	×
319	3208053	Ground Wire	×

Recoil Start-up

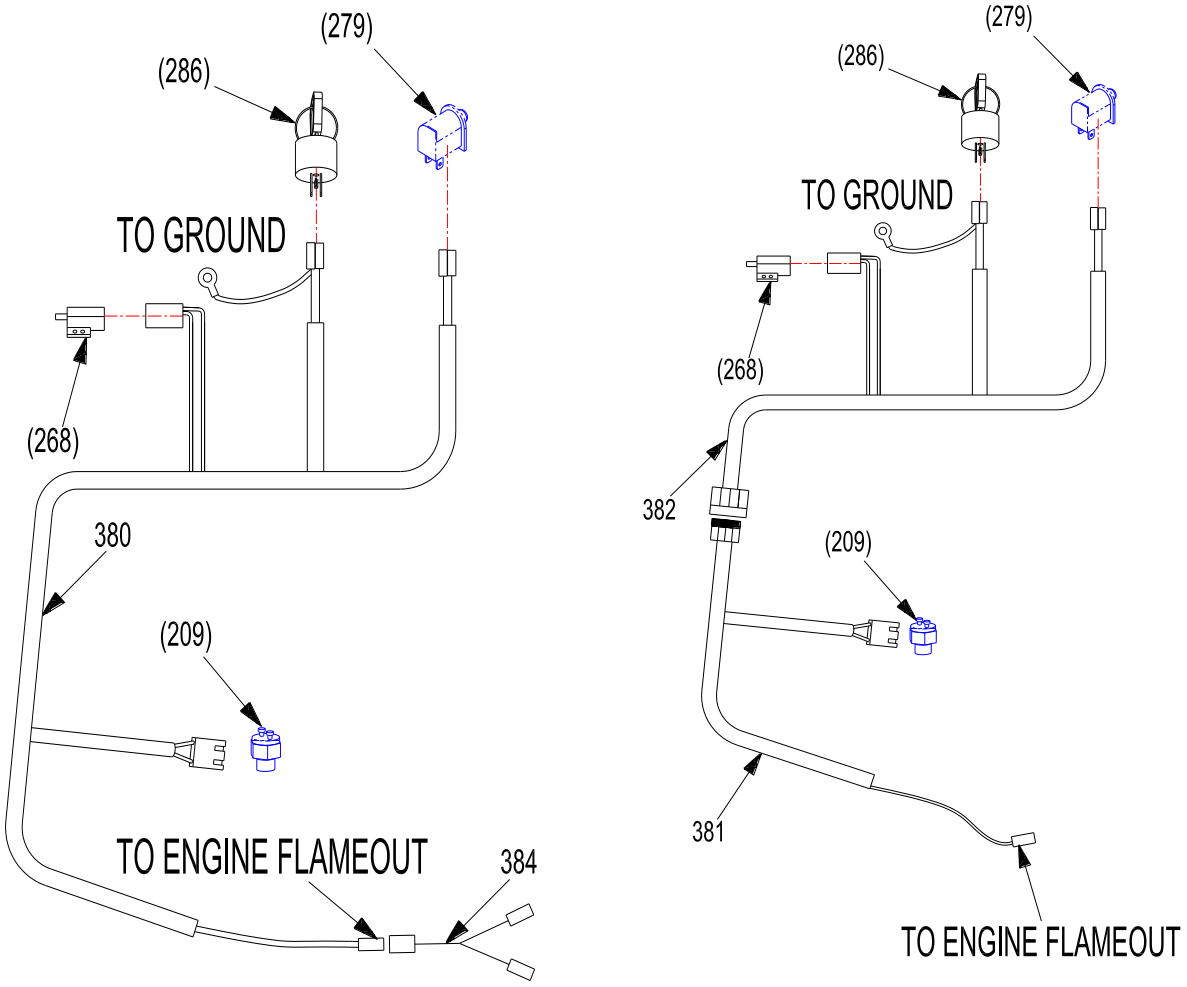

REF.	PART NO	DESCRIPTION	WY36 Kawa13HP	WY36 Honda13HP	WY36 Kawa16HP
209	4807006	Transmission Switch	×	×	×
268	2808005	Blade Switch	×	×	×
279	2808001	Handle Bar Switch	×	×	×
286	4807003	Key Switch	×	×	×
380	3609021	Wire Harness, Handle	×	×	×
384	3609027	Connector, three way (Honda)		×	

REF.	PART NO	DESCRIPTION	WY36 Kohler15HP
209	4807006	Transmission Switch	×
268	2808005	Blade Switch	×
286	2808019	Ignition Switch	×
279	2808001	Handle Bar Switch	×
381	3609045A	Wire Harness, Console	×
382	3609044A	Wire Harness, Handle	×

Safety/Operation and Product Decals

340

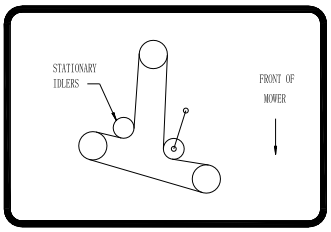

358

341

342

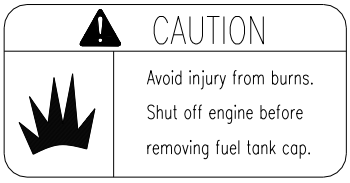

343

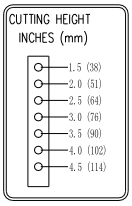

344

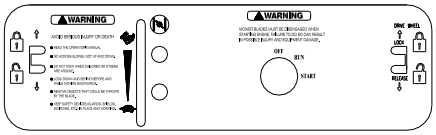

345

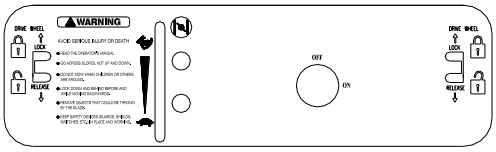

346

347

348

349

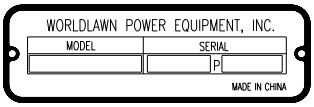

350

351

352

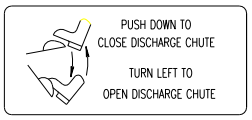

353

354

356

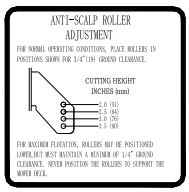

357

359

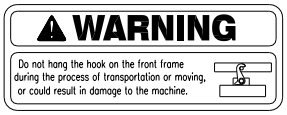

360

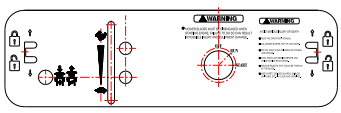

361

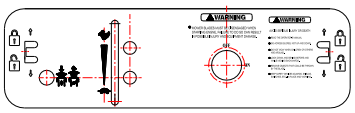

362

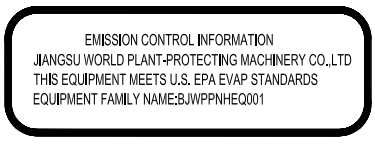

363

Safety\Operation and Product Decals

REF.	PART NO.	DESCRIPTION	36	36E
340	8372	Decal, Float Force 36	×	×
341	8360	Decal, 36	×	×
342	8906	Decal, Worldlawn	×	×
343	8402	Decal, Caution Avoid Injury	×	×
344	8406	Decal, Cutting Height	×	×
345	8905	Decal, Electric		×
346	8907	Decal, Recoil	×	
347	8364	Decal, Blade Start/Stop	×	×
348	8413	Decal, Danger Spinning Blade	×	×
349	8401	Decal, Speed Select	×	×
350	8046	Decal, Serial Number	×	×
351	8411	Decal, Warning Objects Thrown	×	×

REF.	PART NO.	DESCRIPTION	36	36E
352	8921	Decal, Warning Falling Hazard	×	×
353	8922	Decal, Push Down	×	×
354	8923	Decal, Danger Hot	×	×
356	8008	Decal, Caution Guard	×	×
357	8310	Decal, Roller Adjustment	×	×
358	8924	Decal, Belt Routing	×	×
359	8966	Decal, Warning Do Not Hang	×	×
360	8967	Decal, Warning Do Not Hang	×	×
361	8908	Decal, Panel Electric		×
362	8909	Decal, Panel Recoil	×	
363	8601	EPA Decal	×	×

Grass Catcher Assembly

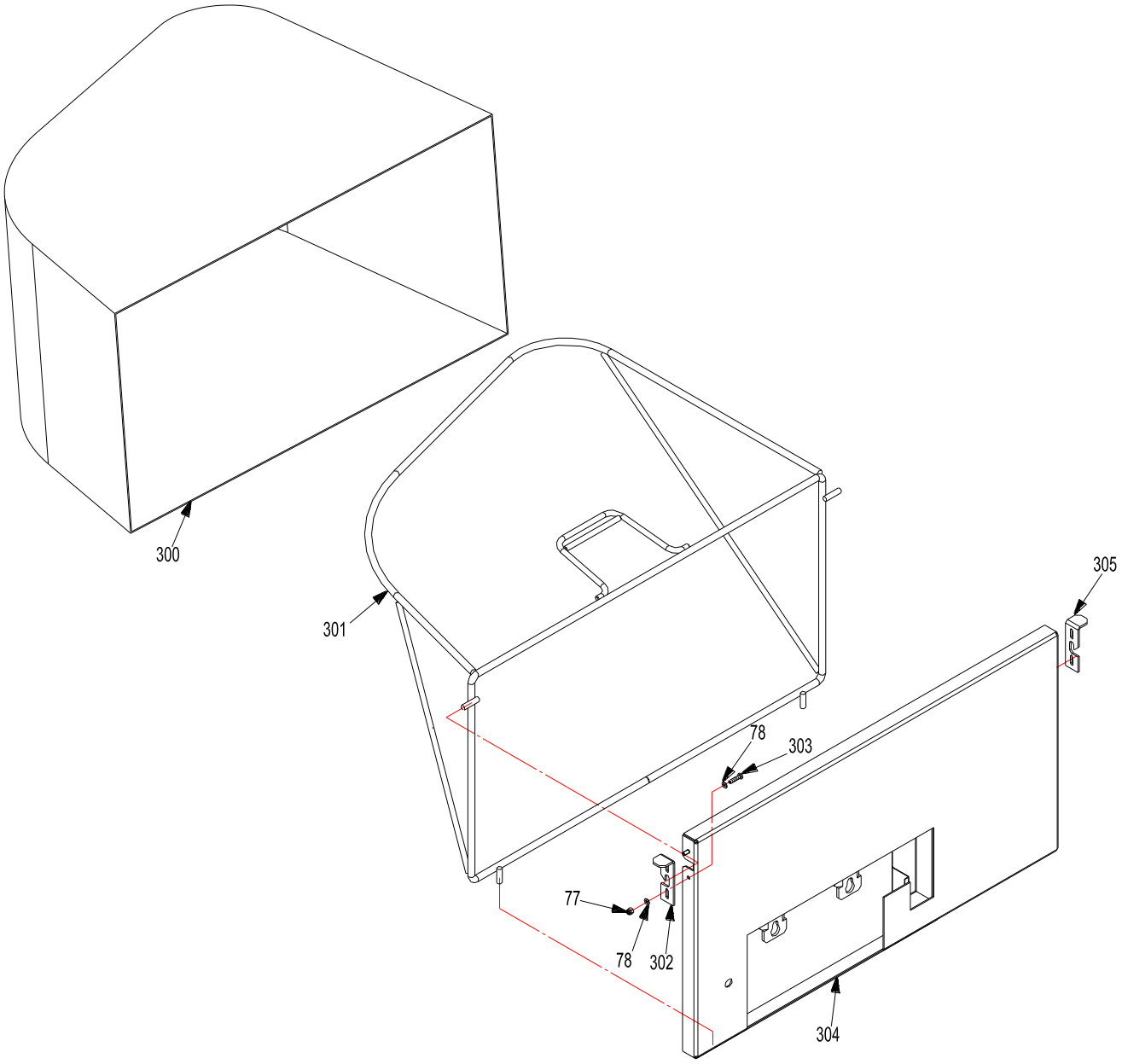

REF.	PART NO.	DESCRIPTION	36	36E
77	B6182-5	Locknut M5	×	×
78	B97.1-5	Flat Washer M5	×	×
300	4810300a	Grass Catcher Bag	×	×
301	4810200	Grass Catcher Wire Frame	×	×
302	2802202	Grass Catcher Latch, LH	×	×
303	B823-520	Screw M5×20	×	×
304	3602650	Grass Catcher Mount Weldment	×	×
305	2802203	Grass Catcher Latch, RH	×	×

Notes:

Notes:

WORLDLAWN®

Worldlawn Power Equipment, Inc.

Industrial Park 2415 Ashland Ave. Beatrice, NE 68310

Phone: (402) 228-4255 Fax: (402) 223-4103

www.worldlawnpowerequip.com

Form No. 36103-201111